Rev	Revision note	Created by	Checked by	Approved by	Date
0	Released	ctlbordupi	ctlbordupi	ctlbordupi	2025-06-03
4	Location for Door and Overflow swaped	puntushalu	ctlbordupi	ctlrelanra	2025-11-14

DESIGN DATA

Total volume	m^3 / gal	242 / 64,005
Shell material; bottom 1/2", sides and top 1/2"		2205 Duplex
Pipe branch		2205 Duplex
Mineral Wool		N/A
Content		Green liquor, SG~1.15
Concrete (Outside lining)	in	N/A
Concrete (Above the Roof Plate)	in	N/A
Hydrostatic test		By Customer

TABLE OF NOZZLES

NOZZLE MARK	PCS.	REPAD SIZE	SIZE / SCH	SERVICE	ELEVATION in (F)
N1	3	4 1/2" x 1/4"	12" - 40S RFF	Pump suction connection	94'-6 1/2"
N3	1	2 1/8" x 1/4"	8" - 40S RFF	Make up connection (w/ Blind Flg.)	99'-10 1/2"
N4	1	4 1/2" x 1/4"	32" x 20"	Overflow connection (lower lip)	97'-5 1/2"
N5	2	4 1/2" x 1/4"	10" - 40S RFF	Floor Drain	89'-4 1/4"
N6	4	N/A	1" - 160S NPT	Density connection	90'-6"/94'-6 1/2"
N7	2	1 1/4" x 1/4"	3" - 40S RFF	Level Transmitter	90'-6"
N8	1	6 1/4" x 1/2"	3'-4" x 6'-0"	Clean out door	
N9	3	7 1/2" x 1/2"	Φ3'-11"	Agitator 1, 2 & 3	91'-11 13/16"
N10	3	N/A	4" - 40S RFF	Agitator 1, 2 & 3 - Weak Wash	90'-9 7/16"
N11	10	N/A	1" - 160S #150 RFF	Sparger Nozzle	90'-2 1/2"
N12	2	N/A	3/4" NPT - 160S	Temperature connection	92'-4 9/16"
N13	2	N/A	12" - 40S BW	Overflow drain	
N14	2	N/A	6'-1 1/2" x 4'-11 1/8"	Stack (Cut in field)	
N15		DELETED NOZZLE			
N16	2	N/A	3/4" Coupl #3000	Temperature connection Overflow)	
N17	1	N/A	3/4" Coupl #3000	Conductivity Overflow	
N18		N/A	1" NPT-40S	Flushing/cleaning connection	

** RFF = 150# RAISE FACE FLANGE

General Notes:

1. Depending up on the availability of plate size, suitable butt joints may be added at shop to make up to the required lengths.
2. Weld seams shall be arranged such that intersection with nozzles or attachments shall be avoided.
3. All sharp corners are to be rounded off.
4. Equipment to be transported to site with nozzles blanked with gasket and metal cover (except nozzles with blind flanges).
5. Fabricated / Rolled steel sizes shall be planned such that it can be mobilized through the available space with respect to site conditions
6. Shell longitudinal and circumferential weld joints Spot RT/UT, E=0.85
7. Roof and floor weld joints 100% Vacuum Box Test
8. Shell attachments, all nozzle welds (including flanges), and the shell-to-floor inside fillet weld 100% PT
9. Temporary support painted yellow to be removed by erector.
10. Overflow pipe to be 2 1/2" (minimum) lower than wear wall inside of box. Fabricator to leave excess pipe at about 6" from design length.
11. Projection of sparger pipe to be minimum 1" inside. Others pipe projections to be <=1 unless otherwise noted.
12. Supplier to add extra gasket material for access door for field use.

CONSTRUCTION TO BE LIQUID TIGHT
VISUAL INSPECTION 100%

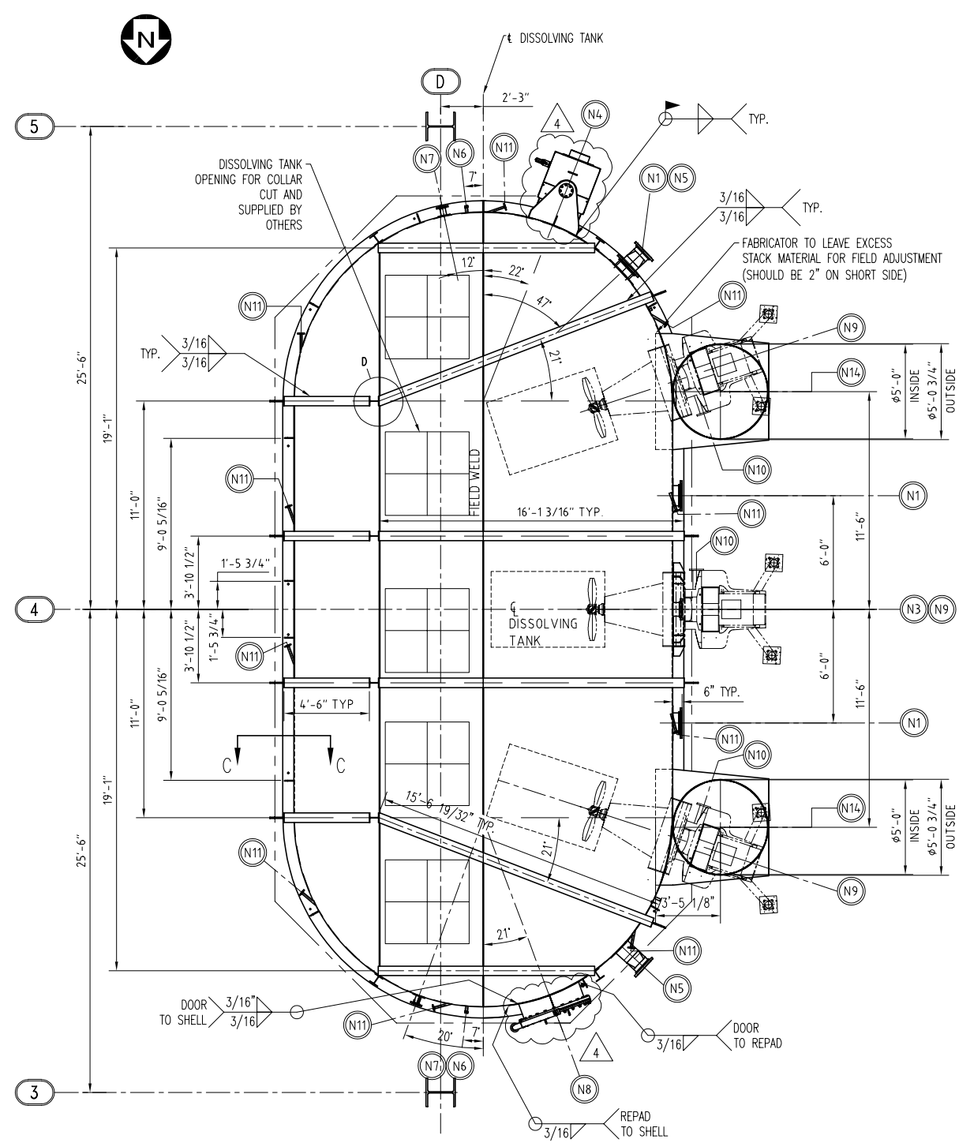

PLAN

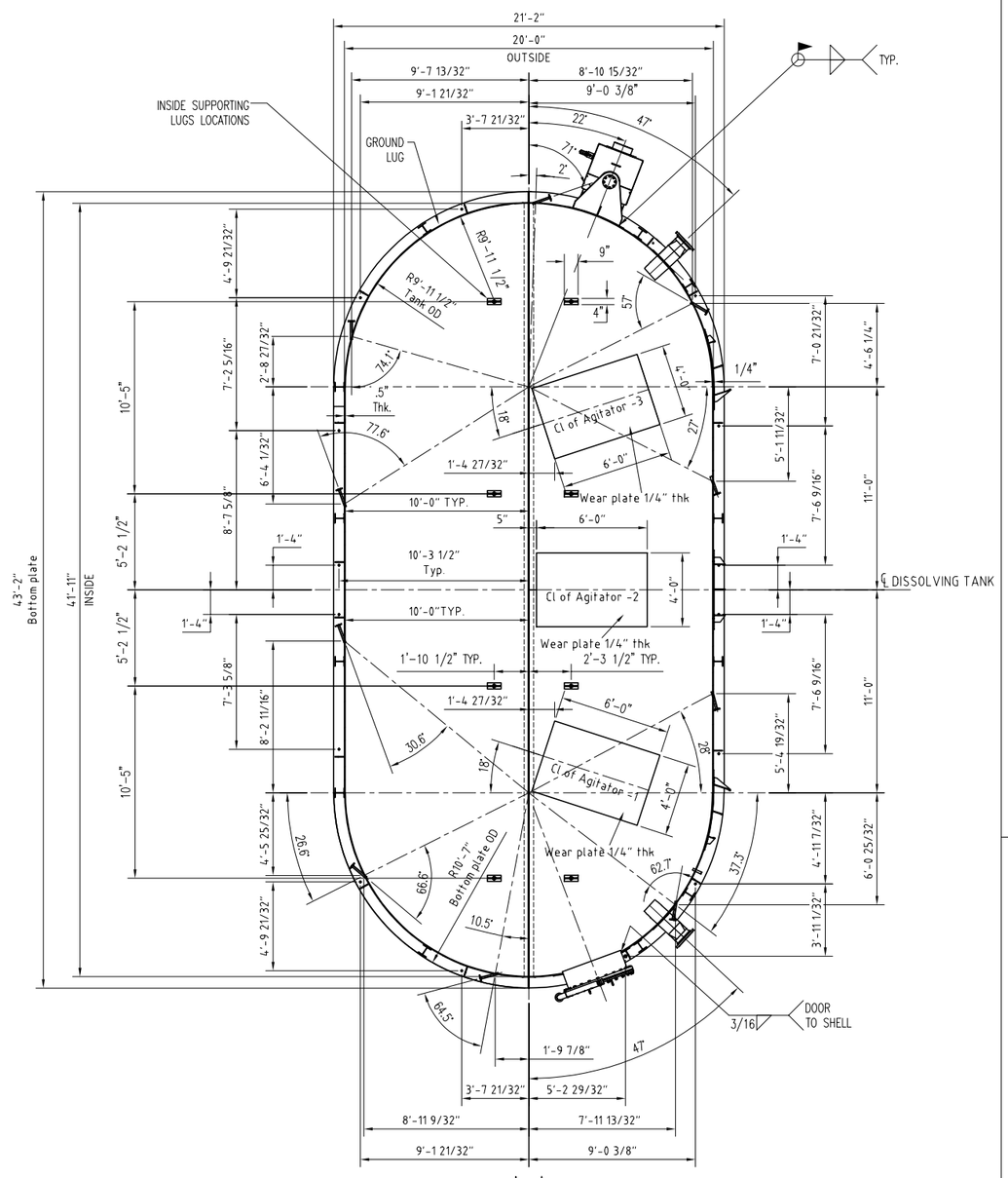

A–A

SPARGER NOZZLE ARRANGEMENT– N11

ANCHOR BOLT LOCATION

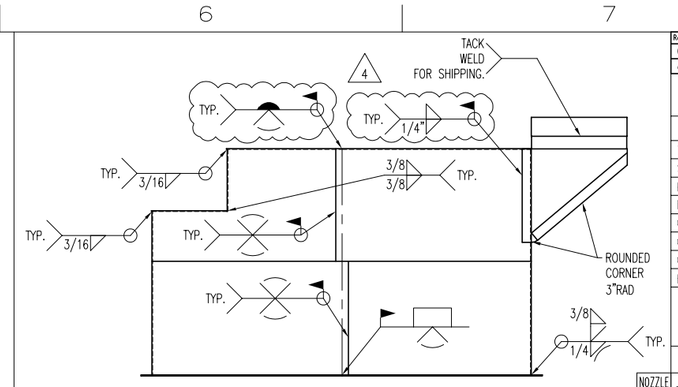

PLATE WELDING DETAIL

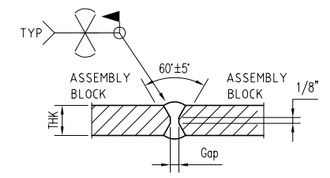

DETAIL FOR ROOF AND SHELL

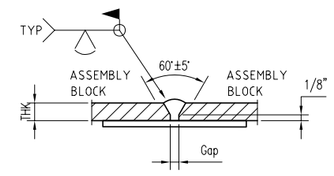

DETAIL FOR BOTTOM PLATE

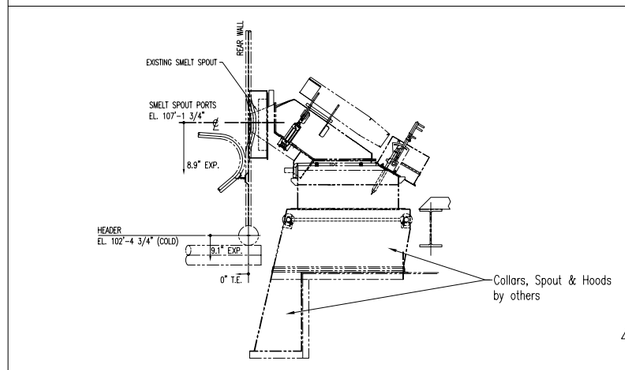

EXISTING SPOUT ELEVATION

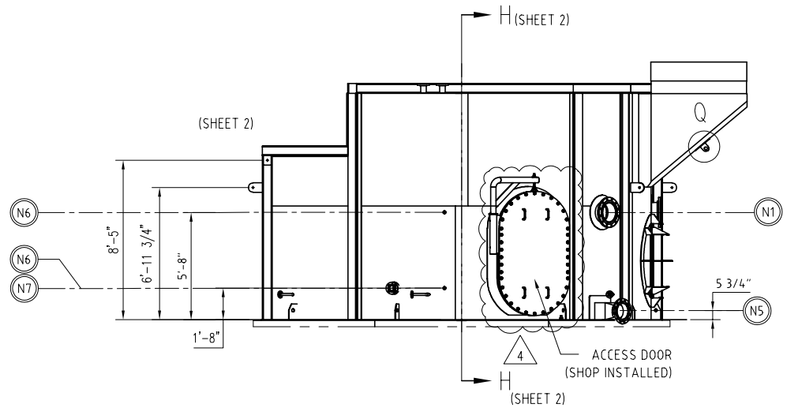

ELEVATION

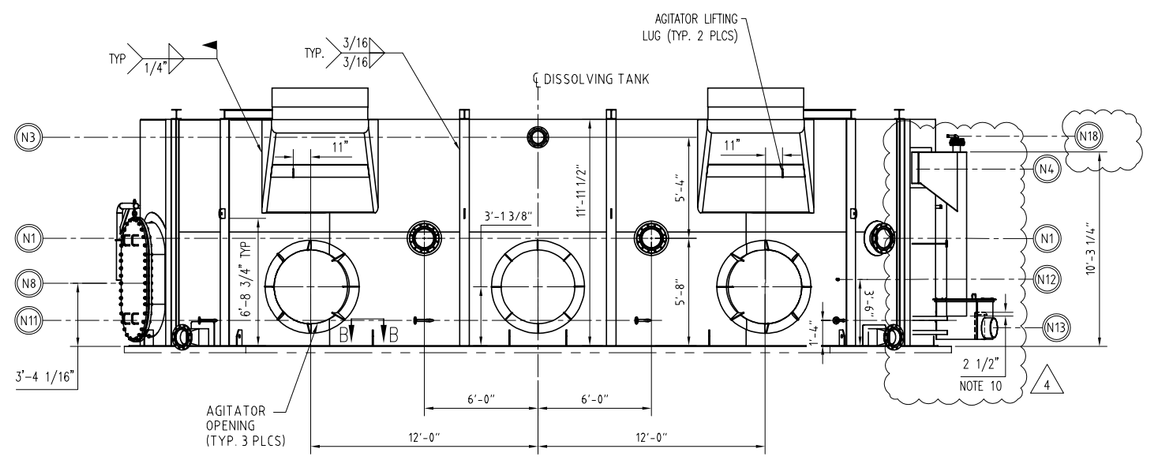

REAR VIEW

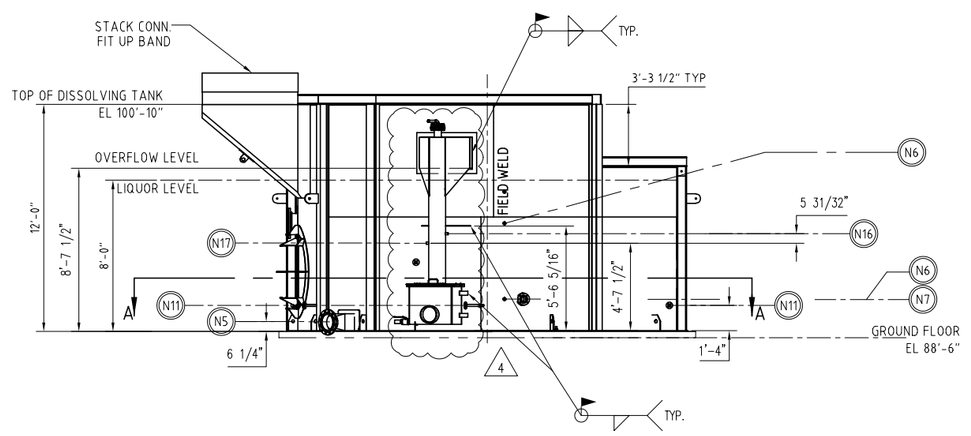

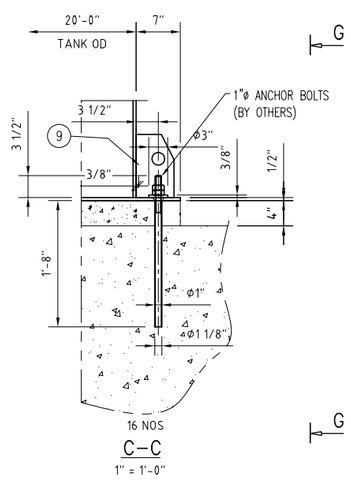

C–C

1" = 1'-0"

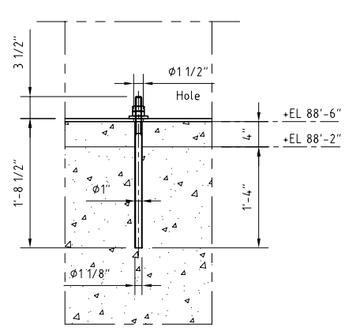

G–G

1" = 1'-0"

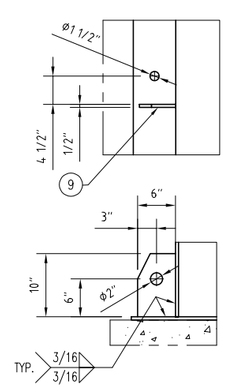

B–B

1" = 1'-0"

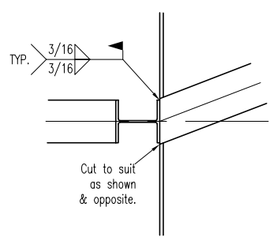

D (2:1)

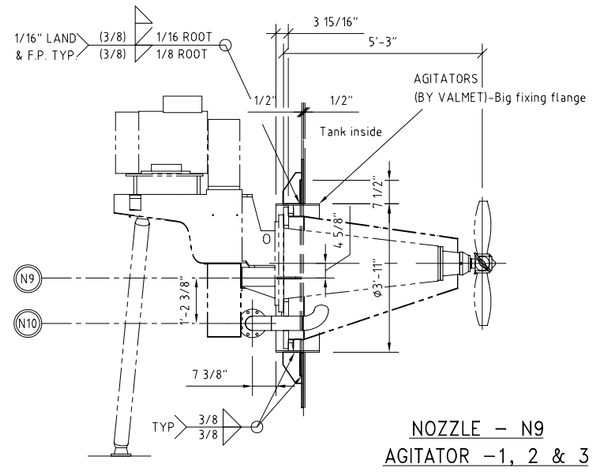

NOZZLE – N9

AGITATOR –1, 2 & 3

1/2" = 1'-0"

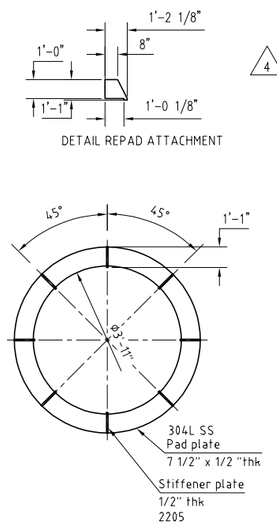

DETAIL REPAD ATTACHMENT

PART NO.	DESIGNATION	MATERIAL	QUANTITY/ UNIT	lbs/Pc	PCS/ SERIES	NOTES
10	PLATE	304L			2	
9	PLATE	2205 Duplex			16	
8	PLATE	A36			8	
7	PIPE (2" SCH 40)	A53			8	
6	ANCHOR BOLT	304SS	16 L.F	66	1	
5	WEAR PLATE 1/4"	2205 Duplex	72 S.F	1470	1	
4	STIFFENER W6x20	304L SS	220 L.F	4385	1	
3	NOZZLE DETAILS	2205 Duplex	-		1	
2	BOTTOM PLATE 1/2"	2205 Duplex	818 S.F	16691	1	
2	ROOF PLATE 1/2"	2205 Duplex	882 S.F	18004	1	
1	SHELL PLATE 1/2"	2205 Duplex	1135 S.F	23166	1	

MATERIAL TAKE OFF

Project	P5115AUA1 GP Naheola RB4 - DT Repl	Device Position	
Mill	Naheola Mill		
Equipment	Recovery Boiler	Item ID	
Projection Method	General Tolerances: ANSI B4.1	Welding Symbols: ANSI/AWS A2.4	Scale: 1/4"=1'0"
Weight	152365 lbs		

This document is the exclusive intellectual property of Valmet Corporation and/or its subsidiaries subsidiaries (collectively and individually "Valmet") and is furnished solely for operating and maintaining the specific project. Re-use of the document for any other project or purpose is prohibited. The document or the information shall not be reproduced, copied or disclosed to a third party without prior written consent of Valmet. By accessing this document, you accept these terms of use.

Title: DISSOLVING TANK ARRANGEMENT DRAWING
RB4

Issue Status: Certified for Fabrication & Construction		Document ID: MF00911582	Sheet: 1 of 2
Confidentiality: Internal	Document Type: Assembly drawing		Revision: 4

Size: E AutoCAD